Duun Industrier as
7630 Åsen, Norway
www.duun.no

FUP Instruction manual

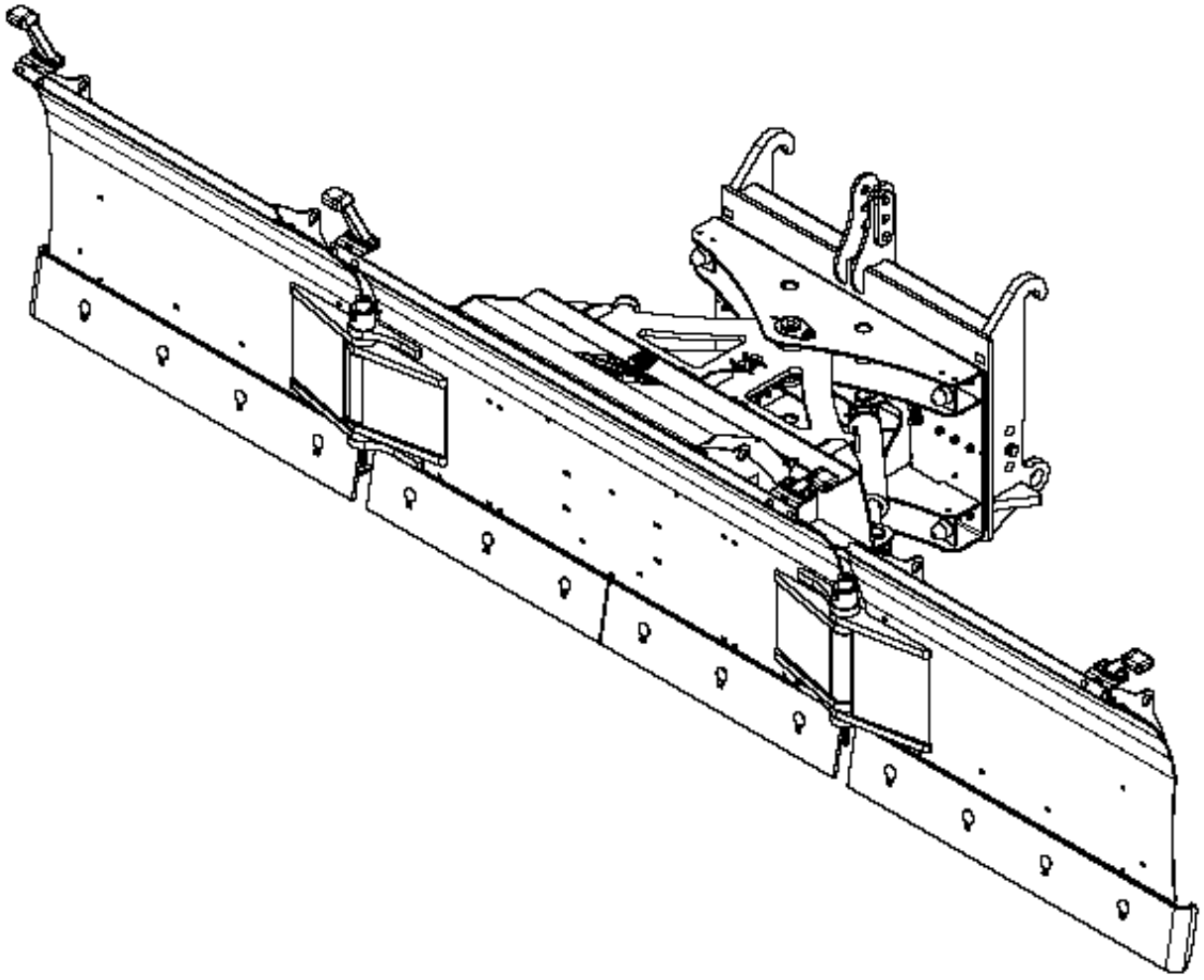

Congratulations on your Duun u-type snowplow.

All Duun tractor operated machines have been engineered and tested in close cooperation with representative users to produce functionally safe and user-friendly machines.

Please read this instruction manual before using the machine.

Good luck!

Machine identification

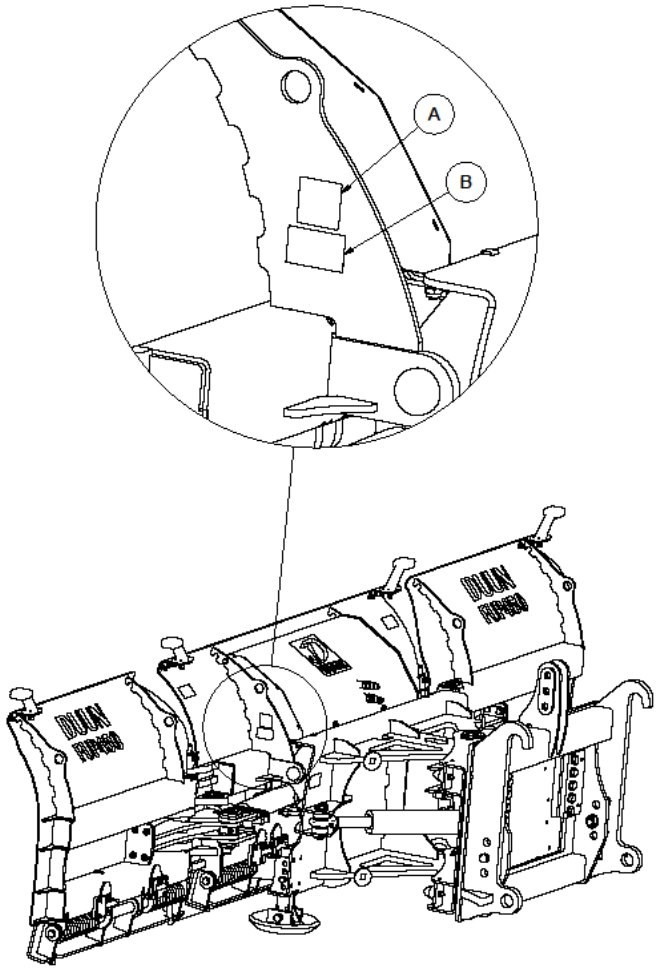

Serial number and manufacturer are indicated on badge (A)

Register serial number and delivery time as indicated.
Always specify serial number when requesting service for the machine.
The machine is CE-marked (B), opposite side of drawing. This marking confirms that the machine has been manufactured in conformity with EU Directive Machinery.

Serial number

Time of delivery (month/year)

Content

MACHINE INDETIFICATION 2

SERIAL NUMBER AND MANUFACTURER ARE SPECIFIED ON BADGE (A) 2

SAFETY 4

WARRANTY TERMS 7

TECHNICAL DATA 8

CONNECTION 10

DISCONNECTION 10

PREPARATION FOR USE 11

WEAR STEEL AND SPRING TRIGGER 12

SERVICE AND MAINTENANCE 13

PRACTICAL USE 15

DECLARATION OF CONFORMITY 16

Safety

All operators, mechanics and the owner must always work carefully with agricultural machinery. Read and observe safety instructions in this instruction manual.



Be particularly aware of warning signs with this symbol, it marks measures that must be carried out in order to avoid accidents. The symbol appears in the instruction manual and on warning signs on the machine.

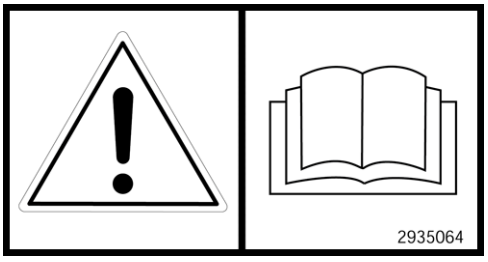

Instruction manual
All operators, mechanics and the owner must be well acquainted with the instruction in this instruction manual before the machine is taken into use.

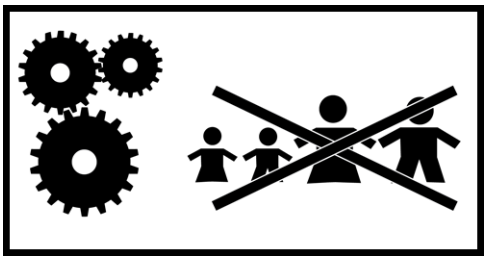

The safety of the surroundings
Be very careful when other people or animals are near the machine or tractor. Never start the machine when there are people or animals close to it, also never stand between the tractor wheels and the machine!



Safe connection and use
Do not allow anyone to stay between the machine and the tractor when the machine is connected to the tractor. The same applies during the use of the machine. Make sure that the connection is carried out in a safe manner. By automatically connecting with a triangle or HMV, the hydraulic hoses are connected before the start of work. Connecting with draw bolts, secure the drawbar connection with lunch pins before the hydraulic connection and start operation.

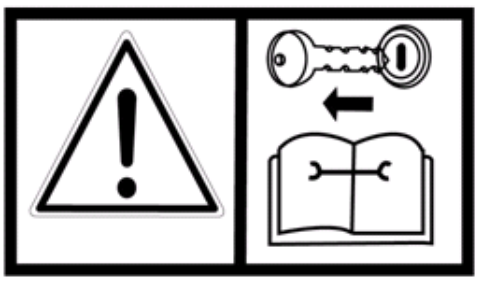

Safety in case of interruptions and maintenance
Remember always to stop the tractor’s engine and remove the ignition key before you lubricate, adjust, clean, or carry out repairs. This is to secure that the tractor does not start before you have completed the operation.

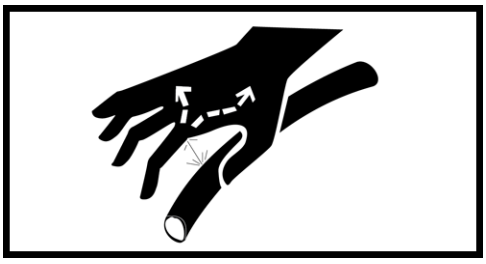

Hydraulic high fluid pressure

Be careful when you work with hydraulics. Wear eye protection and gloves. Hydraulic oil under high pressure may penetrate the skin and cause serious infections. See a doctor if you have sustained an injury. Make sure no one is close by when performing hydraulic functions.

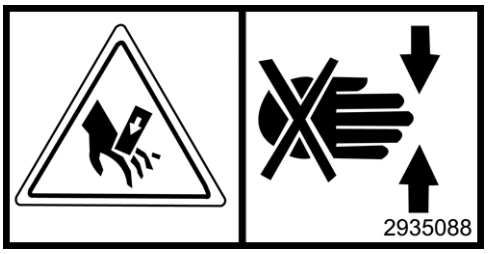

Rotating parts – risk of crushing

Case covers and moving parts are preferably marked in yellow.

All covers must always be used except when necessary maintenance, and always with a stopped engine as mentioned in **safety in case of interruptions and maintenance**. Pay special attention to clamping risk at points marked for this. Avoid hydraulic movement of the ejection spout when there are people nearby.

Never drive with open covers for chains and sprockets. Chains and sprockets can cause major damage to body parts that come into contact with them during operation.

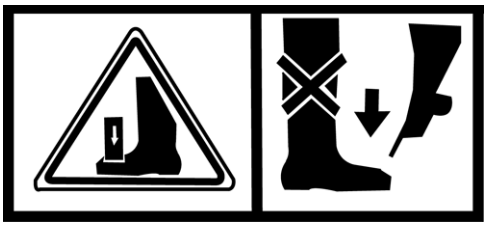

Clamping risk when adjusting

When adjusting the support wheels, make sure that you do not stand with your feet under the wear steel.

Always lower the machine to safety rest at ground level when it needs to be parked.

Working on the machine the tractor engine must be stopped and the power shaft set to neutral.

Never work under a lifted device unless it is mechanically secured against coming down.

Before startup after servicing make sure all tools have been removed and brought into place.

Do not work in clothing that can be retracted into moving parts of the machine (e.g. scarves, wide coats).

Wear hearing protection if the machine has annoying or damaging noise levels.

Before the machine is raised or lowered, make sure that no person is near or touching the machine.

If warning signs are removed during repairs or service, new signs should be installed immediately!

Warranty terms

Duun FUP has 12 months guarantee against defects in materials and workmanship.

Parts that are not originally manufactured by Duun Industrier as, for example, wheels, hydraulic parts, etc. are subject to these suppliers' guarantees and terms.

In cases where a repair is considered to be covered by the guarantee, the representative must inform the supplier's representatives that the repair is intended executed based on the guarantee. In this context, the following information must be recorded:

- Product name
- The product's serial no. (see the machine identification)
- Date of sale
- The product owner's address, telephone no.

In case of such a repair, the supplier is presented with a claim within 3 weeks after the repair date.

Replaced parts are to be kept until a decision has been made with reference to the claim and the replaced parts are to be forwarded to Duun Industrier as for assessment if so required.

As the employment of the product is beyond our control, we may only guarantee the quality and do not accept liability for the product's general performance.

Duun Industrier as reserves the right to modify the design and specifications and/or make alterations and improvements without notification.

What is not included in the guarantee:

- The guarantee does not cover economic loss as a consequence of interruptions.
- The guarantee does not cover consequential loss due to defects.
- The guarantee does not cover defects or damage caused by misuse and uses that are not in accordance with the instruction manual's specifications and guidelines.

Technical data

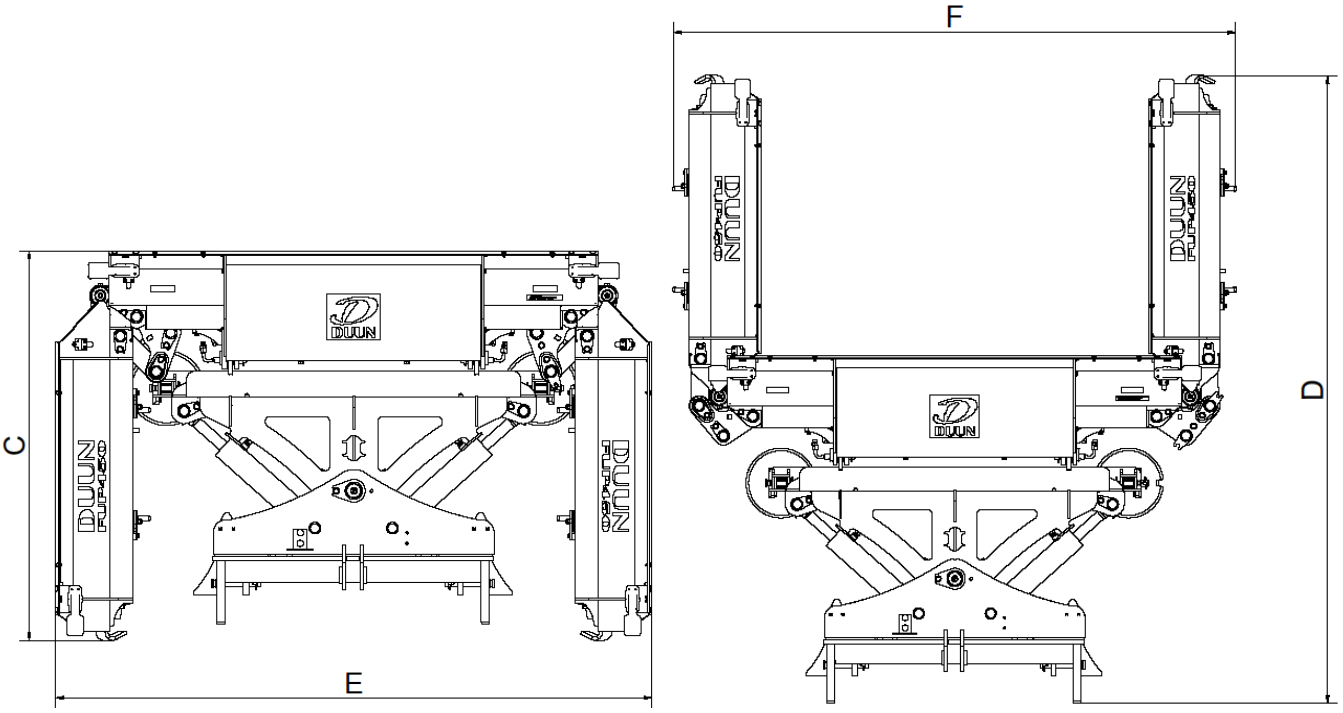

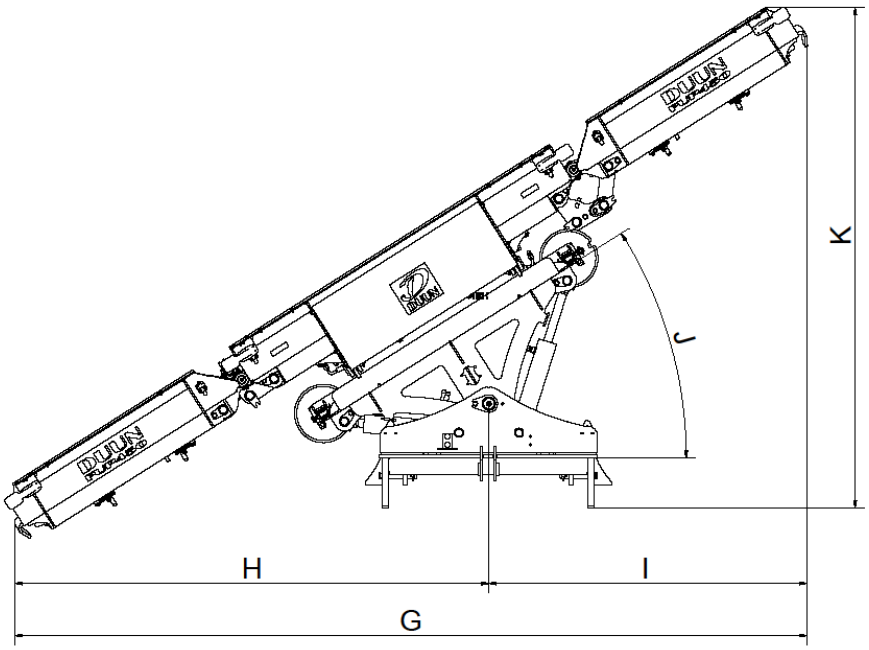

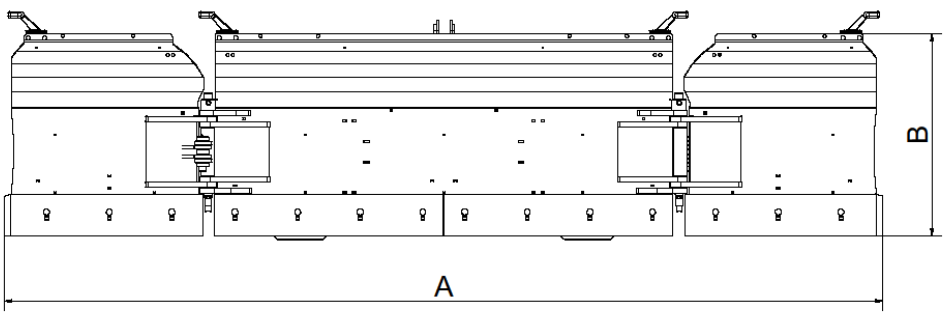

Features	FUP390	FUP430	FUP450	FUP490
Weight	1143 kg	1184 kg	1211 kg	1252 kg
Weight of blade	703 kg	744 kg	771 kg	812 kg
Weight of swing frame	539 kg	539 kg	539 kg	539 kg
A	3900 mm	4300 mm	4500 mm	4900 mm
B	981 mm	981 mm	981 mm	981 mm
C	1158 mm	1158 mm	1463 mm	1463 mm
D	2230 mm	2230 mm	2535 mm	2535 mm
E	2230 mm	2630 mm	2230 mm	2630 mm
F	2264 mm	2660 mm	2264 mm	2660 mm
G	3305 mm	3631 mm	3824 mm	4147 mm
H	2030 mm	2186 mm	2288 mm	2443 mm
I	1275 mm	1446 mm	1535 mm	1703 mm
J	30 gr	30 gr	30 gr	30 gr
K	2250 mm	2357 mm	2414 mm	2520 mm
Three-point linkage connection	Yes	Yes	Yes	Yes
Connection BM	Yes	Yes	Yes	Yes
Hydraulically operated wings	Std	Std	Std	Std
Spring trigger wear steel	Std	Std	Std	Std
Hole distance fastens wear steel	305 mm	305 mm	305 mm	305 mm
Wear steel bolts	16x45 quality 10,9	16x45 quality 10,9	16x45 quality 10,9	16x45 quality 10,9

Connection

The snowplow is prepared for connection directly to a tree point or with a large BM load attachment. We recommend to use a fixed top strut when using a three-point attachment.

Make sure no one is standing between the implement carrier and the implement during connection.

Hydraulic hoses are installed. At the same time, check that all hoses are tight and undamaged before starting hydraulic functions. When the tractor engine is stopped, you should ensure that there is no pressure in the hoses by activating the tractor's hydraulic valves.

Pay special attention to the dangers of hydraulic oil under pressure.

The hydraulics are controlled by an electric selector valve which distributes the oil to the different functions. The front plow needs a double outlet from the implement carrier and 12 Volt power to control this valve.
The valve has two coils and the plow must be prepared with a 12 Volt switch for each of these coils.

- No power The swing on the plow works
- Power on left coil Left wing works
- Current on the right coil Right wing works
- Power on both coils The oil is distributed on both wings

Disconnection

This happens in the opposite order of connection.
Place the machine on the even ground.
Disconnect hydraulic hoses.
Locking bolts for drawbars and top struts are released.
Now the machine is disconnected and can be left.

Preparation for use

Adjusting the skid pad and top strut
The snowplow is placed on a level surface with the wings forward. Adjust the top strut that the pad is flush with the ground all the way along the wings. Adjust the skid pad to the desired working height. The skid pad (A) are adjusted by moving the bolt (B) and the skid pad.

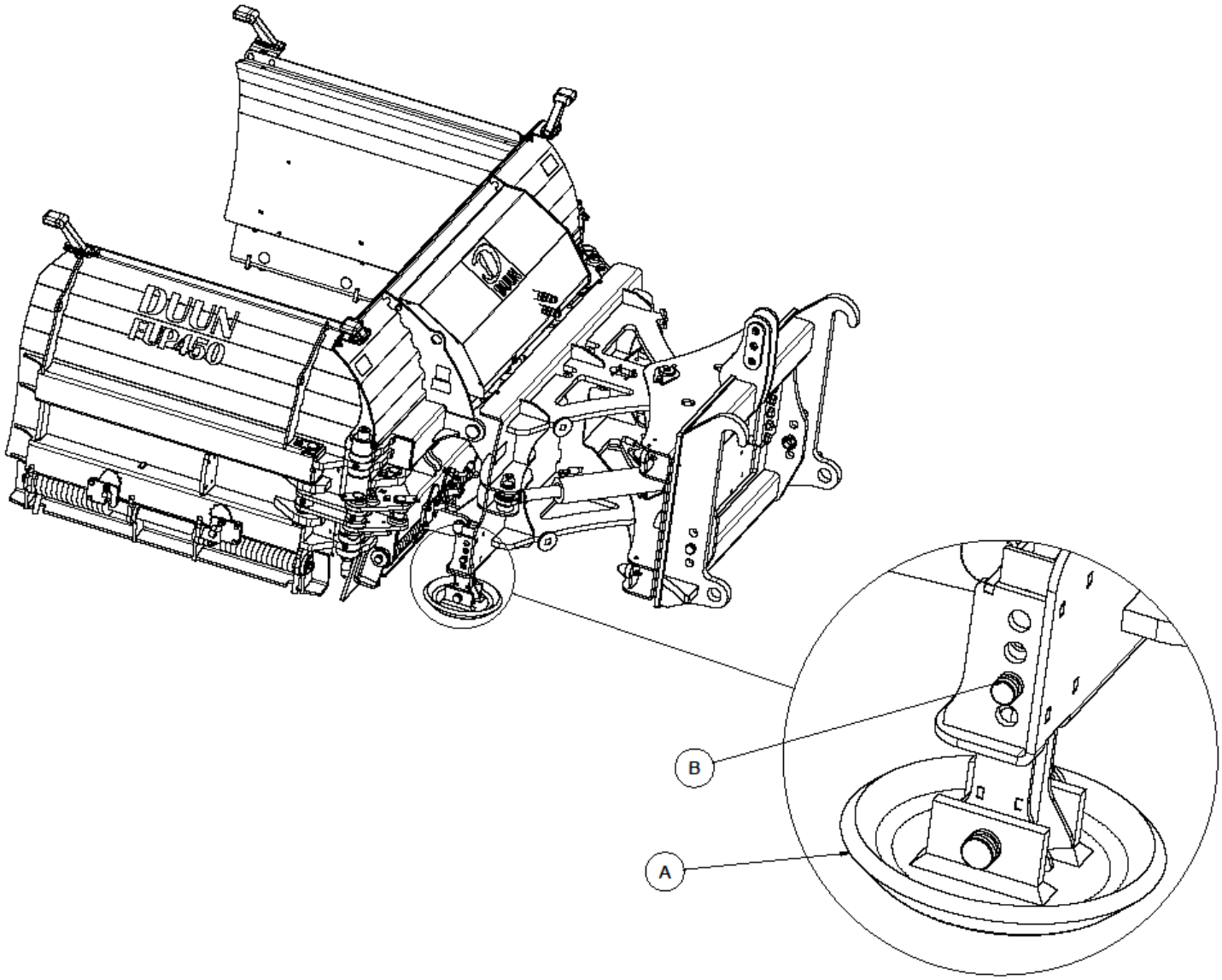

Wear steel and spring trigger

The snowplow is equipped with wear steel spring. These wear bars have the Norwegian Road Administration's standard on the attachment. The snowplow is supplied with smooth wear steel, but you can use other types of wear steel. e.g. perforated.

The attachment to the wear steel is spring-loaded and will bend backwards under the heavy load. e.g. when hitting a curb or hooking into a manhole cover. The springs can be adjusted according to how tight the driver wants them. Can be easily replaced by removing the buckle in them and pulling out the shaft that holds them in place.

The springs are tightened and relaxed by placing a tube on the end of the spring (A) and tensioning the spring before moving the locking bracket (B) to the desired position.

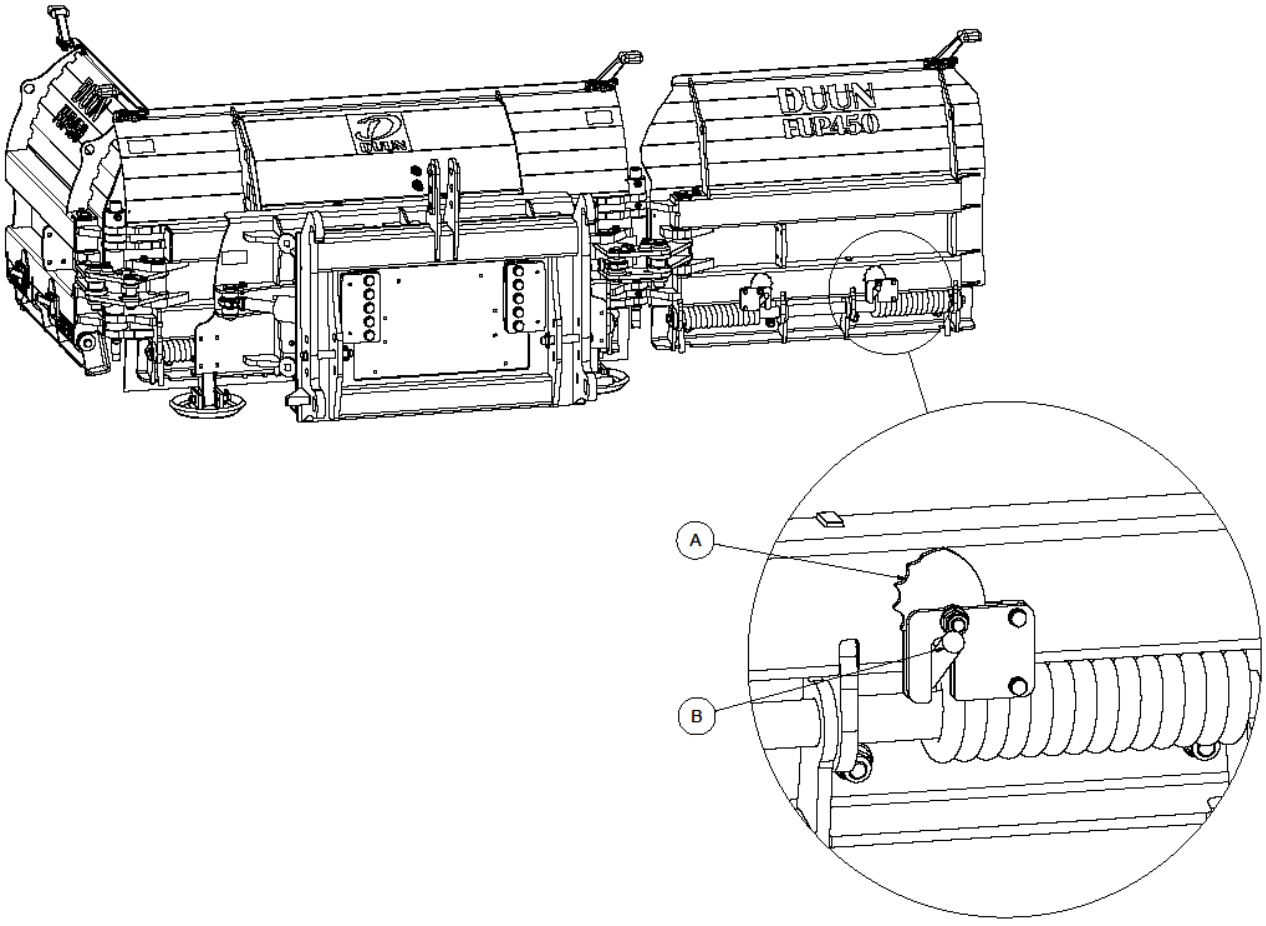

Service and maintenance

Check all screw connections after the first 5 operating hours. Go over all the screws before each season after this.

Wear steel
Turn, move down or replace the wear steel before they are very worn.

Hydraulic hose fuse
Check the hose connections if they are not stretched or cut during use. Tighten loose hose connections and secure/fasten the advance of the fittings. Failure to secure hydraulic hoses can lead to leaks and consequential damage to the tractor and components.

Lubrication points
Lubricate daily or after 10 operating hours.

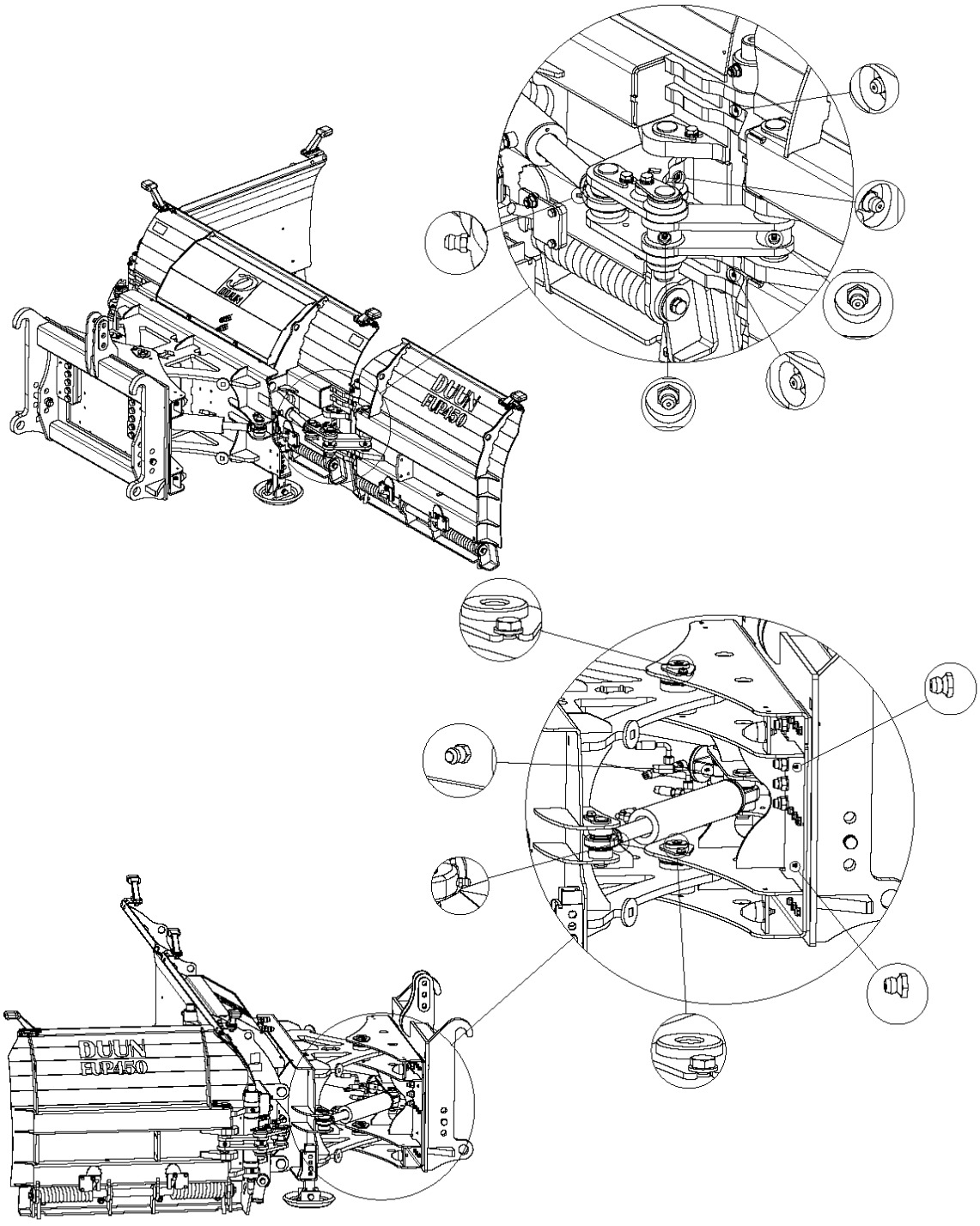

Weekly or after 25 operating hours.

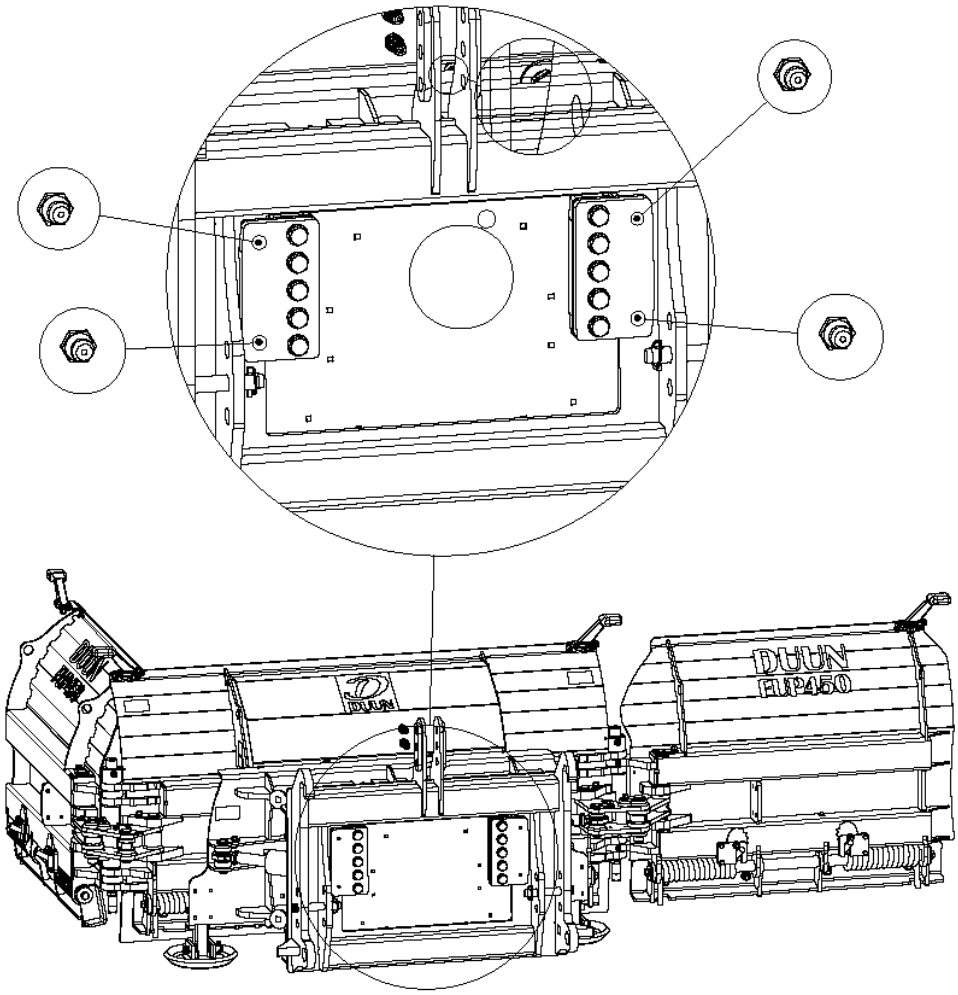

Driving hazard
It is the driver's responsibility not to expose himself or others to danger when using the snowplow. People and animals in the vicinity of the machine must be taken into account. Since there are foreign bodies in the snow (stones and the like), the driver must take care so that the snow does not pose a danger to other road users.

No one should ever stand on the machine while it is driving or moving.

Practical use

The Norwegian Labor Inspection Authority has listed snow blowers among machines that must be used with particular care and must therefore not be operated by people without documented training. The user must have a driving license for a tractor (aged 16) and have a certificate that he has received training in the use of the machine/tool.

The machine requires skilled operation, the user manual must be read before connecting to the tractor and putting it into operation, even if the user had previous experience with a similar machine – this is for user’s safety.

CERTIFICATE OF CONFORMITY

Responsible person

Name:	Karl Martin Eggen
Position:	CEO
Company name:	Duun Industrier as
Address:	N-7630 Åsen
	Norway
Telephone:	+47 74 01 59 00

Person responsible for the technical documentation: Rolf Even Duun

Declares that the following machine(s): FUP390 Snowplow U-type
FUP430 Snowplow U-type
FUP450 Snowplow U-type
FUP490 Snowplow U-type

Manufacturer: Duun Industrier as

Type Duun Snowplow U-type

is in accordance with:

Directive 2006/42/EC Machinery

Signed by:

Karl Martin Eggen

Åsen, 01.08.2025